Front protection complete with fittings: Brackets, bolts and tool key

Type **OFFROAD**

Airflow	B13-2	**33 800,-**
Smooth profile	B13-2S	**33 800,-**
Mounting kit	80119	

X-Light complete with fittings: Bolts, pre- wired and 4 spotlight clamps

Lights not included!

Airflow	K13-2	**9 100,-**
Smooth profile	K13-2	**9 100,-**

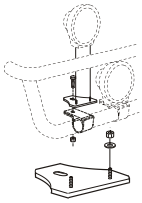

Mounting plate for Hella luminator 15907 **200,-**

Light-Bar with mounting kit

Lights and clamps are not included!

Airflow	H13-2	**5 800,-**

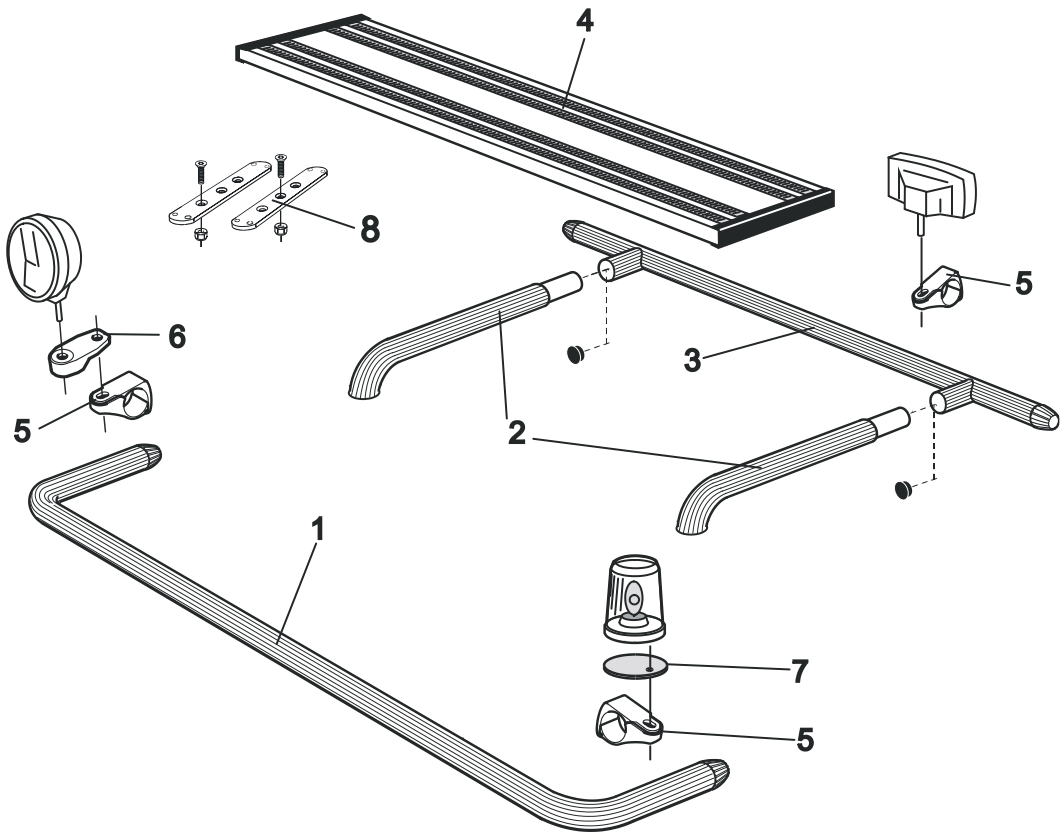

Pos.1	**Front Top-Bar**, with mounting kit		*Airflow*	G13-2	**5 900,-**
			Smooth profile	G13-2S	**5 900,-**
Pos.2	**Spacing tube**, with mounting kit				
	For **Comfort cab** (L2H1)		*Airflow*	E13-2	**3 500,-**
	For **Sleep cab** (L3H1)		*Airflow*	E13-3	**3 500,-**
Pos.3	**Rear Top-Bar**, with mounting kit				
	For **Comfort cab** (L2H1) and **Sleep cab** (L3H1)		*Airflow*	G13-1	**4 700,-**
Pos.4	**Catwalk** with fittings			15932	**2 800,-**
Pos.5	**Airflow clamp**			15903	**340,-**
	Clamp (for smooth profile)			15902	**280,-**
Pos.6	**Airflow extension**			15923	**110,-**
	Extension			15912	**110,-**
Pos.7	**Mounting plate** for beacon	Ø 150mm		15915	**230,-**
		Ø 165mm		15917	**240,-**
		Ø 240mm		15916	**270,-**
Pos.8	**Universal fitting** for roof signs / roof light bars			20409	**500,-**

Sideliner

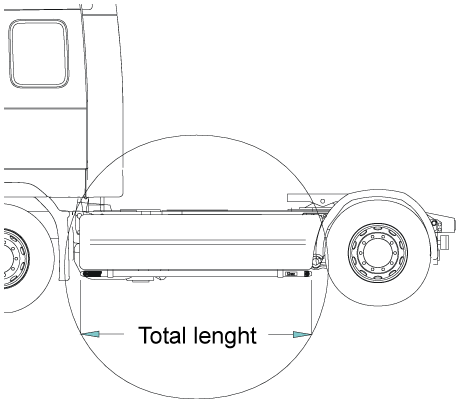

Total length / side 0 – 2500 mm

Airflow	S-1A	**3 800,-**
Smooth profile	S-1S	**3 800,-**

Total length / side 2501 – 5000 mm

Airflow	S-2A	**4 500,-**
Smooth profile	S-2S	**4 500,-**

AIRFLOW
These products are supplied in our AIRFLOW profile as standard.
The new generation aerodynamic accessories are designed for the highest performance.
On request, we can also supply the products in the traditional ”smooth” profile.

FINISH
As standard the accessories are supplied **anodized** in silver color.
Products can also be supplied **sand blasted** for your own lacquering, no additional charge,
or **powder coated** in black or white color or **lacquered** in your own personal color, ask us for a quote.

Brackets comes standard powder coated black, but is possible to get painted in the same color as the front protection

Note! *Catwalks come anodized only.*

PRICES: All prices are in **SEK** and are subject to VAT and ex works Färila (Sweden)

We reserve the rights to technical or price changes without prior notice

FURTHER INFORMATION *about our accessories for mounting of, for example, lights can be found in our folder*

”Accessories”